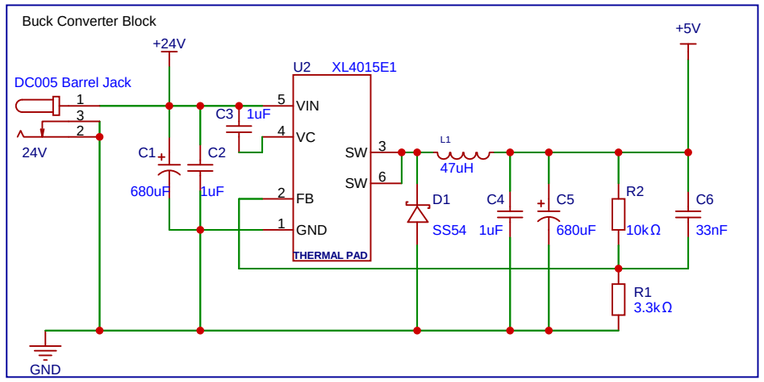

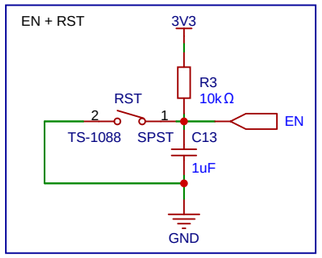

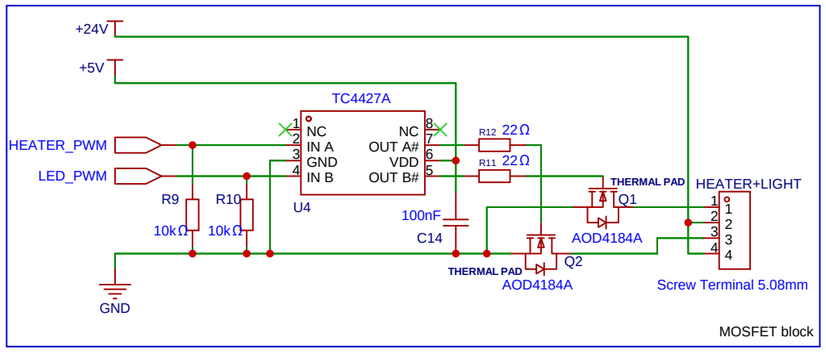

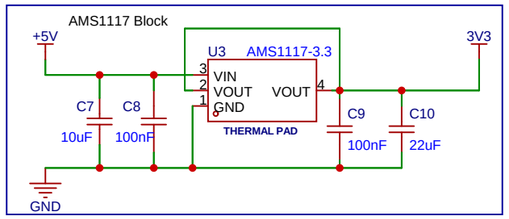

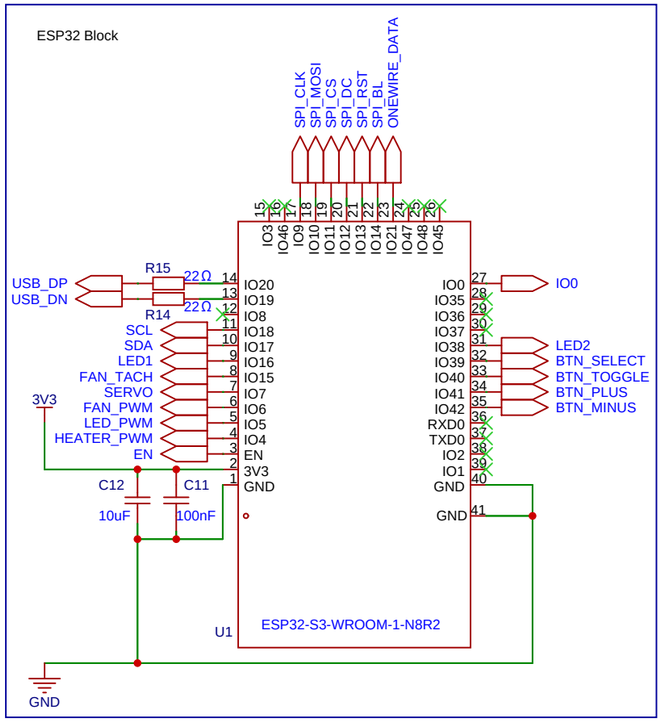

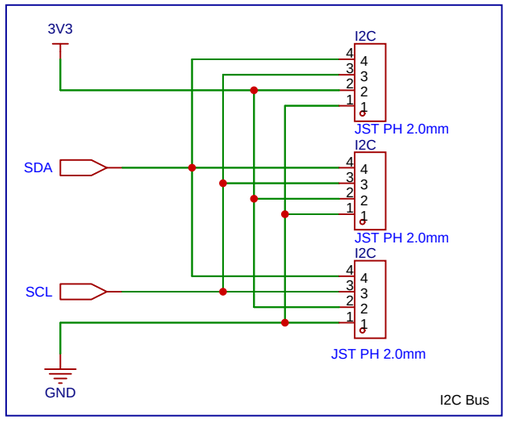

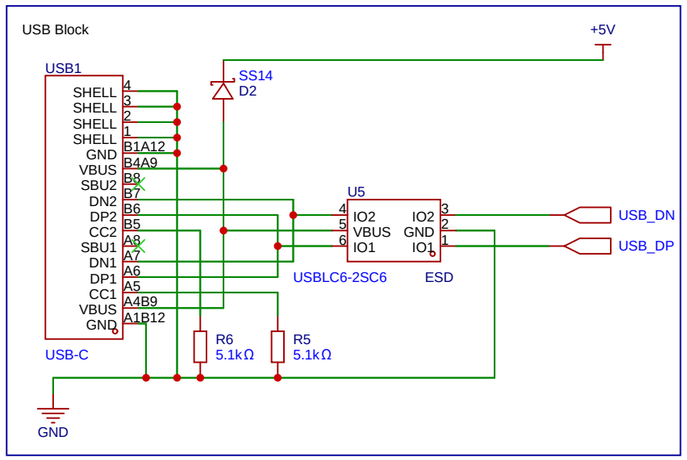

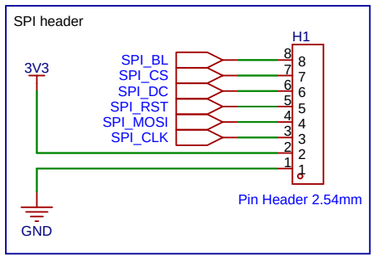

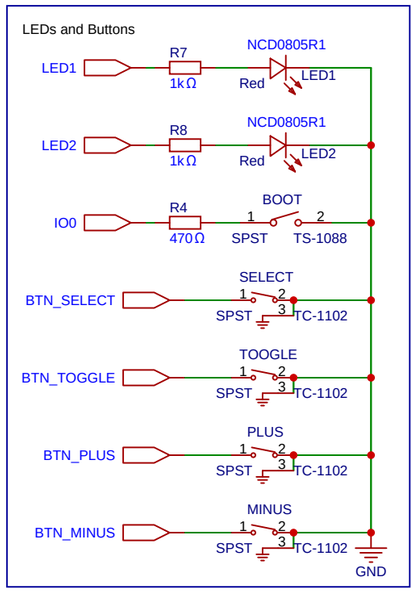

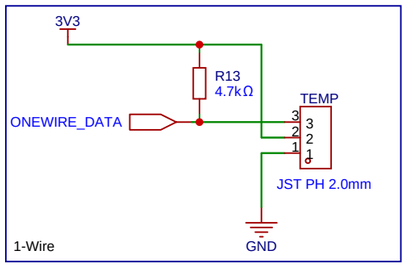

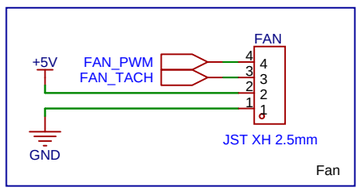

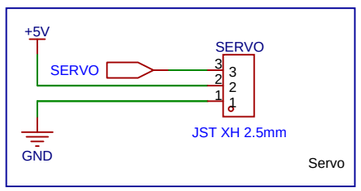

Schematic	Smart Akerbar v2.0		Create at	2026-03-07
			Update at	2026-03-12
Board	Smart Akerbar v2.0		Page	P1
Drawn	apolloFER	Smart Akerbar		
Reviewed				
		Version	Size	Page 1 Total 1
EasyEDA		V1.0	A3	EasyEDA.com

ESPHome greenhouse controller. ESP32-S3, 24V buck to 5V/3.3V, TC4427A gate driver + dual N-ch MOSFETs (heater/LEDs), 5V fan + servo, I2C/1-Wire sensors, SPI TFT, USB-C with ESD protection. 100x55mm 2-layer.